ANGELO PO - PENTOLA GAS RISCALDAMENTO INDIR.AUTOCLAVE 100l.
1D1PI1GA - 31-01-2003 » 24-04-2003

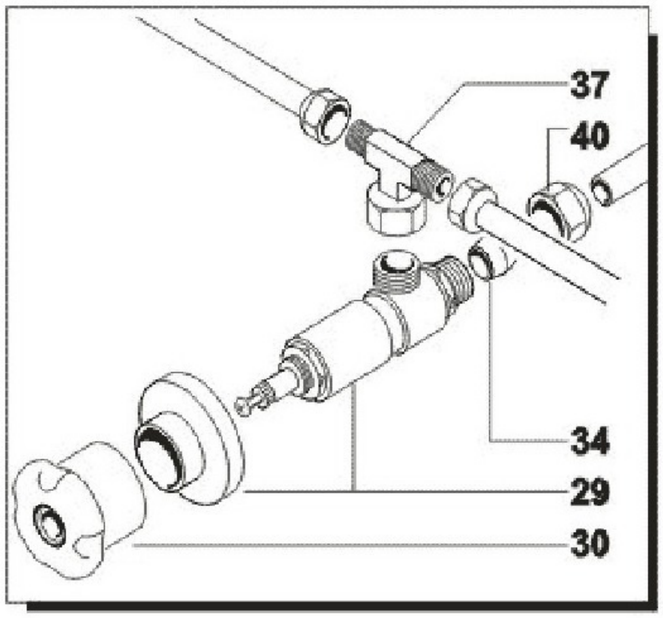

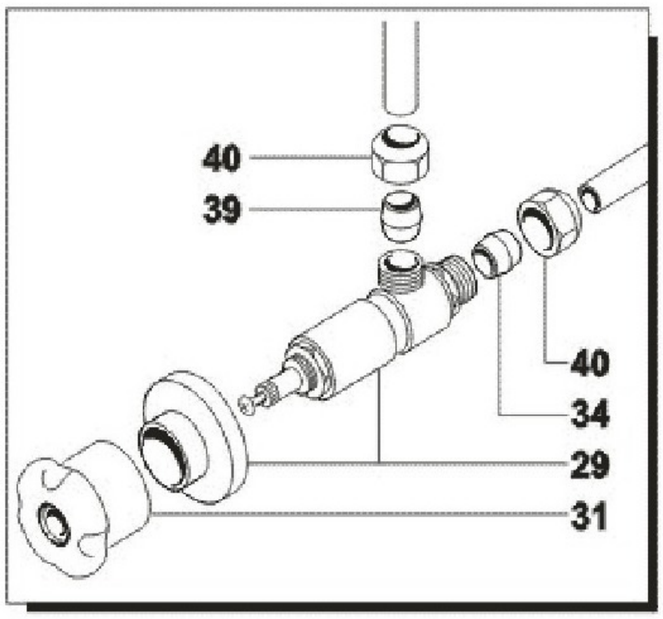

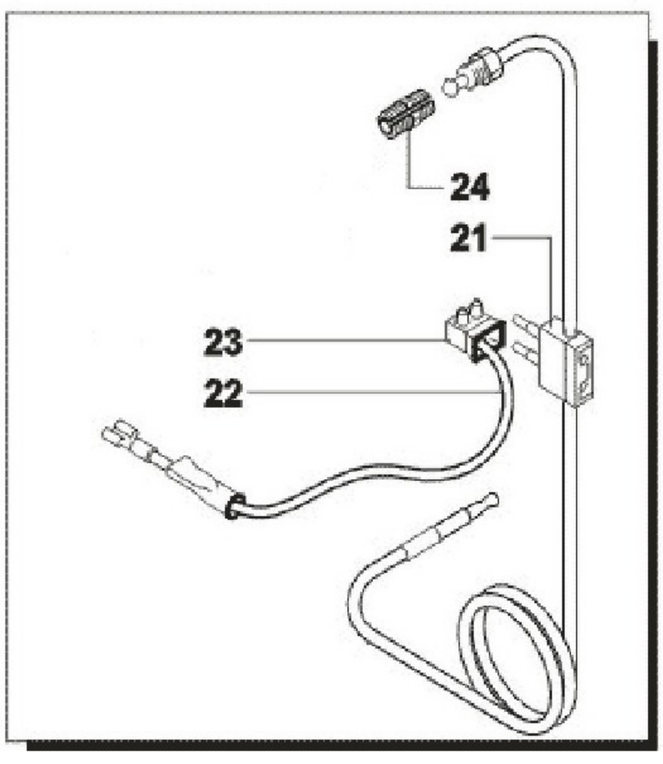

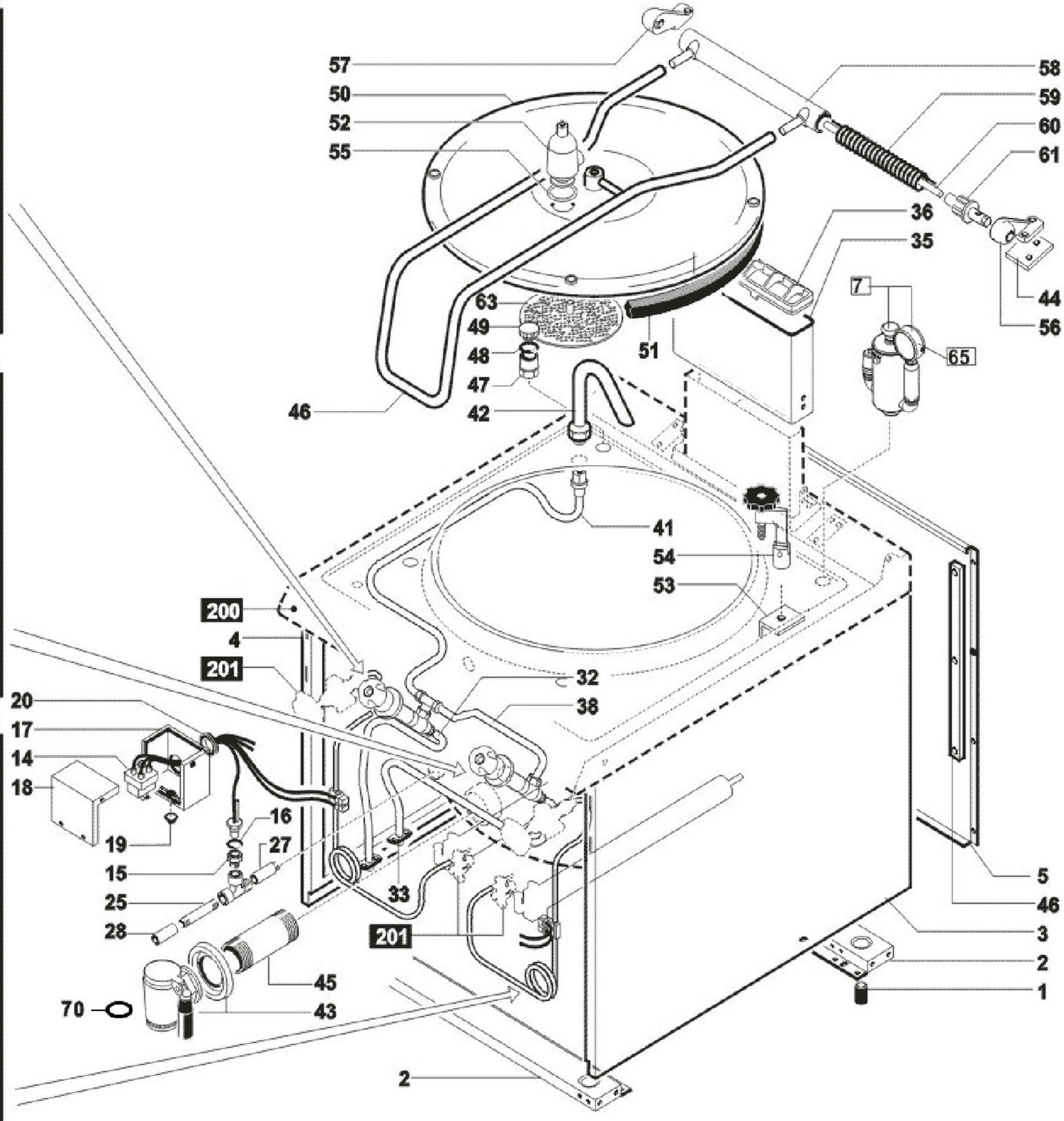

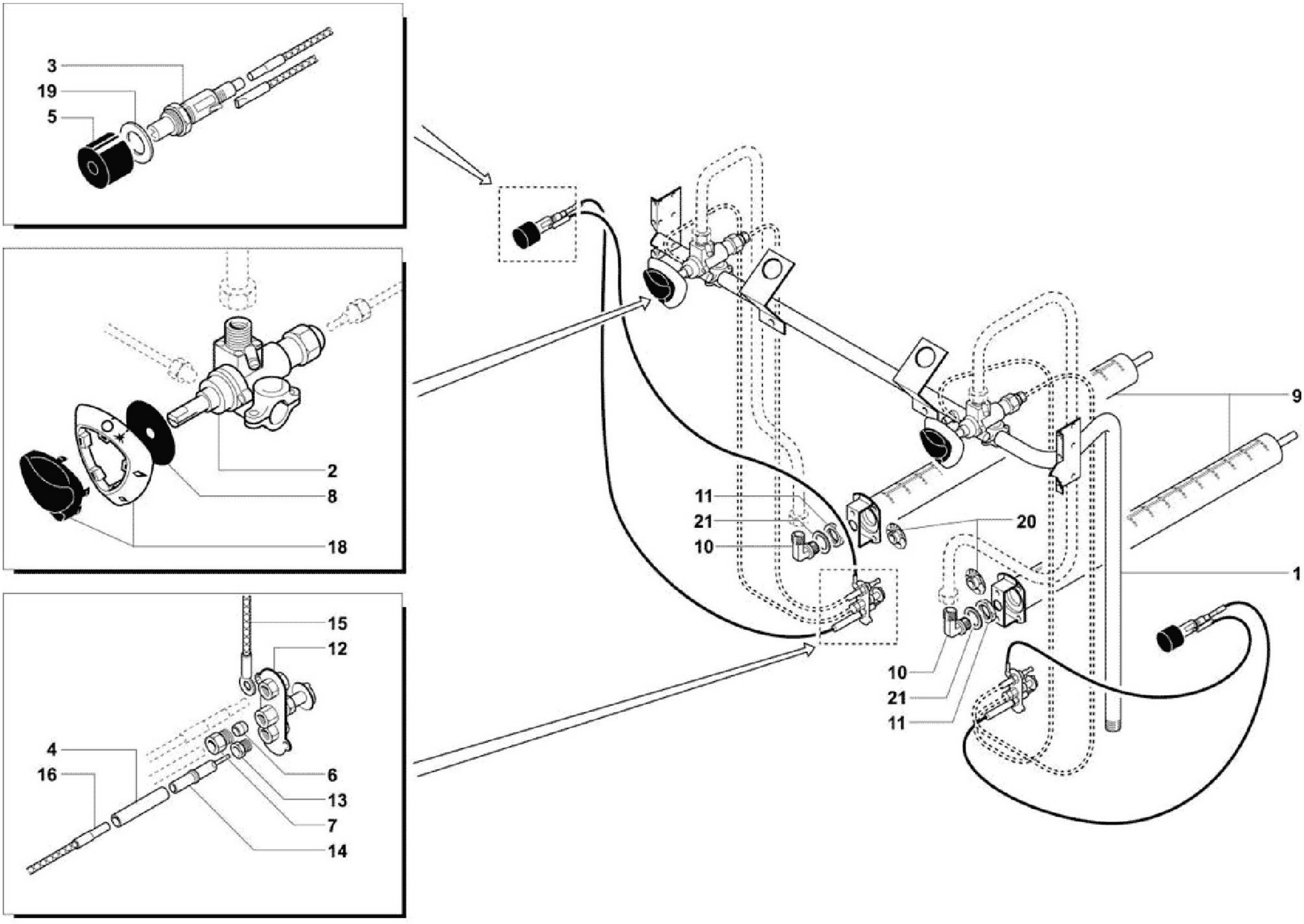
3
19
5
2
8
18
15
12
4
16
6
13
7
14
11
21
10
20
9
1
10
21
11
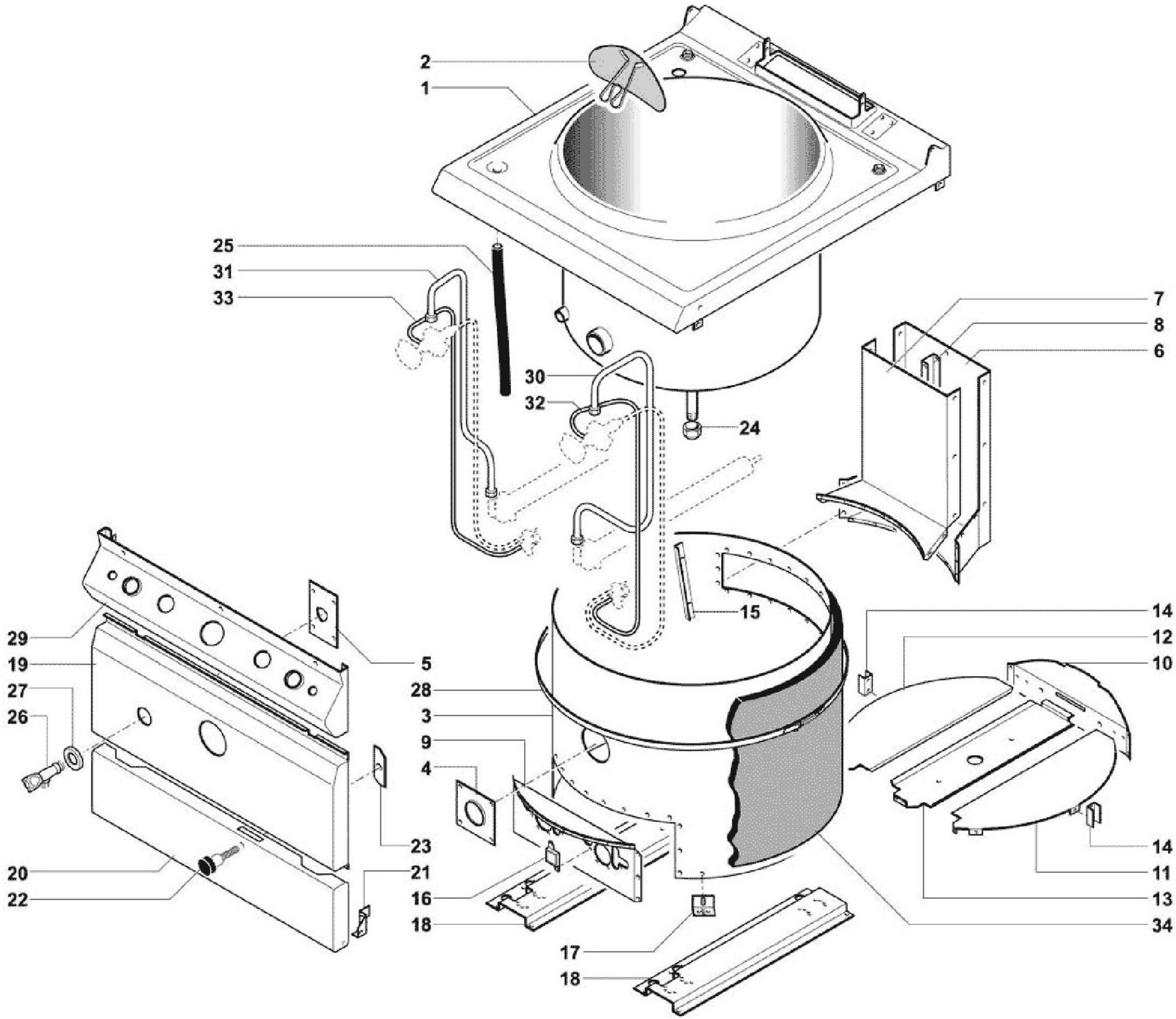
ANGELO PO - PENTOLA GAS RISCALDAMENTO INDIR.AUTOCLAVE 100l.
1D1PI1GA - M000650 - M.PIANO/CAM.COMB. PI - 31-01-2003 » 24-04-2003